TECHNICAL DATA

Three Phase Electric Motors - Aluminum Frame
UM2A 160L-2
18.5 kW / 25 Cv
2940 RPM

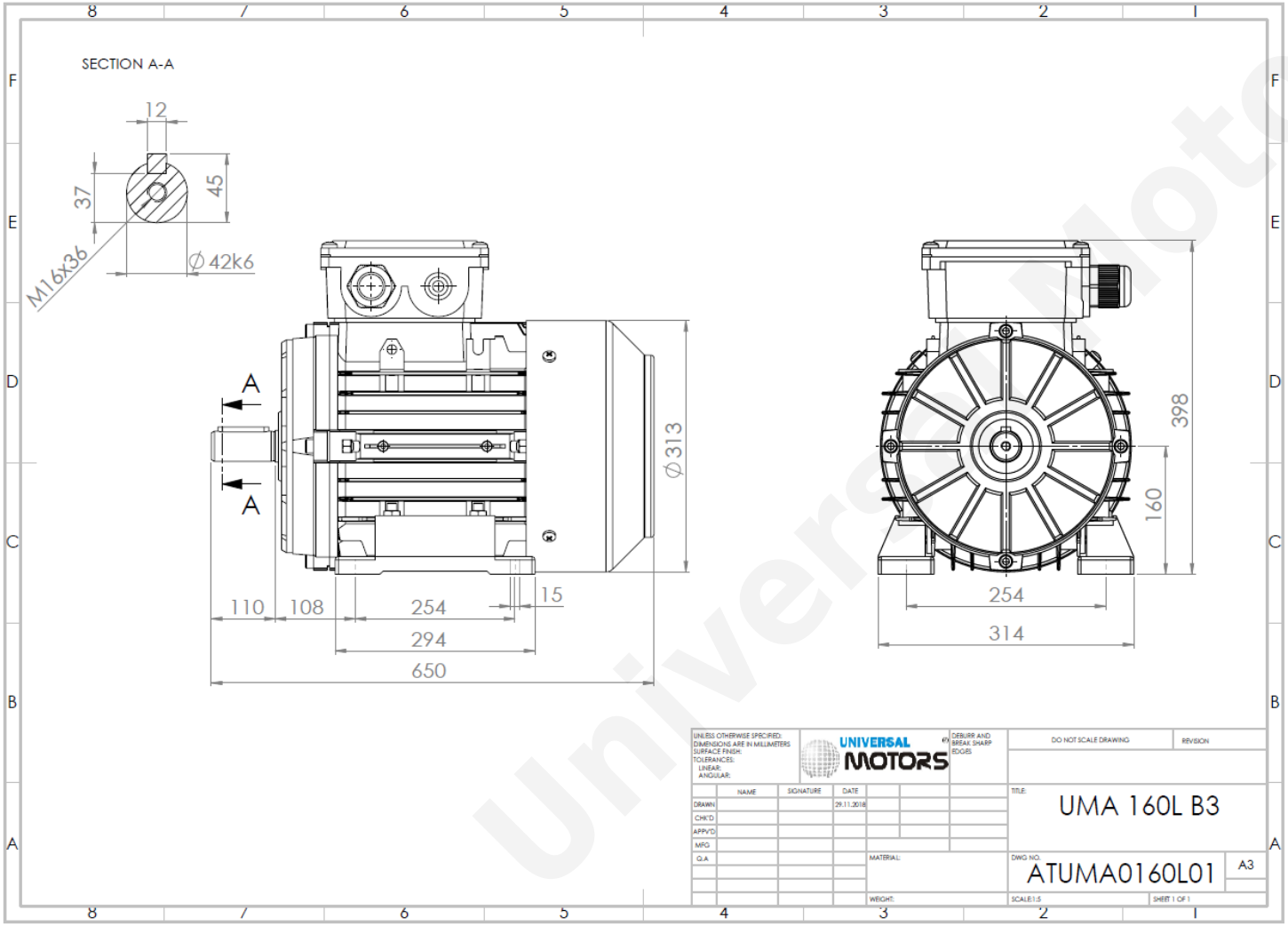

Motor type:	**UM2A 160L-2**
Output:	**18.5 kW / 25 Cv**
Speed (min^{-1}):	**2940 RPM**
Frequency:	**50 Hz**
Voltage:	**400 V**
Current:	**31.9 A**
Power factor (Cos Ø):	**0.92**
Poles:	**2**
Insulation class:	**F**
Temperature rise Class:	**B**
Efficiency 50%:	**90.9 %**
Efficiency 75%:	**91.8 %**
Efficiency 100%:	**91.9 %**
Torque:	**60 N.m**
Tstarting/Tnominal:	**2.5**
Istarting/Inominal:	**8.7**
Tmaximum/Tnominal:	**2.9**
Noise:	**86 Db(A)**
Weight:	**101 Kg**
Brake AC:	**AC8**
Torque Brake DC:	**200 N.m**
Bearing DE:	**6309 2Z**
Bearing NDE:	**6309 2Z**
Torque Brake AC:	**200 N.m**
Brake DC:	**K8**

Regime - S1 **Altitude - 1000m** **Environment Temperature - 40ºC**

* References applied only in the UK

CONTACTS:

UNIVERSAL MOTORS
Rua de São Brás,745
4480-782 VILA DO CONDE

Tel: +351 252 299 080
Fax: +351 252 299 089
Mail: geral@universalmotors.pt

Universal Motors